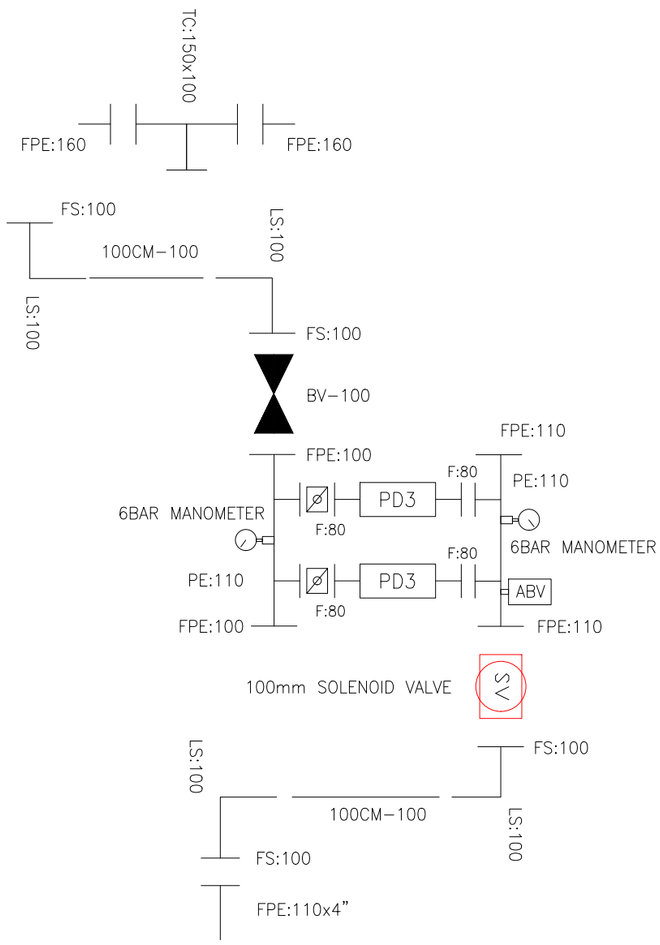

D4x3

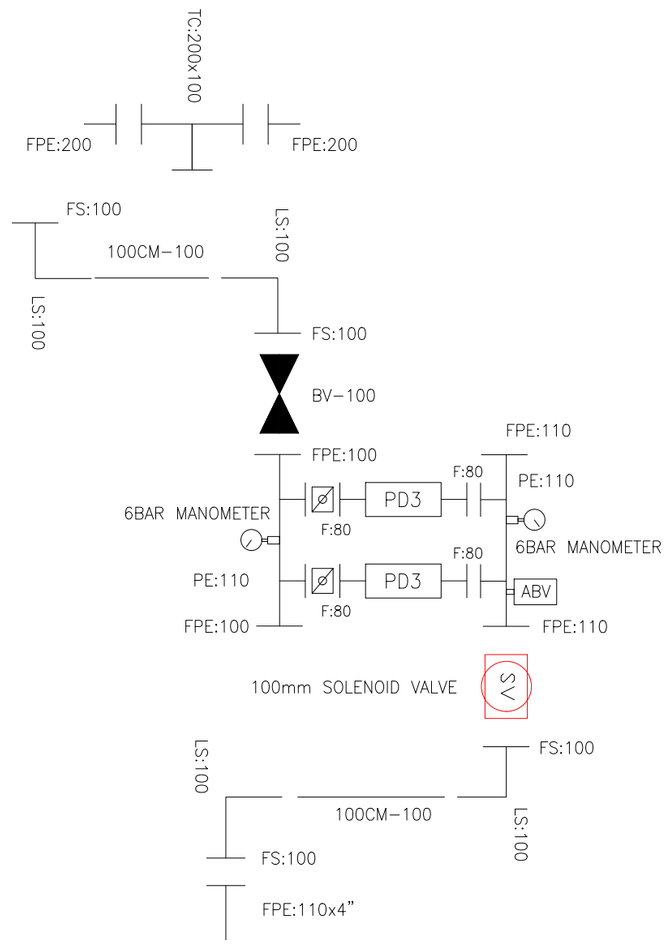

D3x4

		PROJ.NO
DATE	SIGNATURE	
Abbas Rahbar	Abbas Rahbar	DESIGNED
	Abbas Rahbar	DRAWN
		CHECKED
		APPROVED
PRESSURIZED IRRIGATION		FIELD

CLIENT: MAHYA AGRO-INDUSTRY CO.
CONSULTANT: ABBAS RAHBAR

PARVINABAD PISTACHIO ORCHARD
SUB SURFACE AND DRIP PROJECT

DETAILs-142Ha

SCALE FIT-A3

UNITS: METRIC

DWG.NO.GE-PISTACHIO-SDI-2/14